Access Control Reader Manual

1 Product Features and Technical Parameters

1.1 Product Features

1. Work voltage:DC9V－DC24V;standby current:<80mA
2. MF1 or EM compatible card，reading distance 0－10CM（it depends on the coil and installation environment）
3. Capacity: one piece master card,2000 users（can be customized 5000,10,000,20,000 user capacity）
4. Infrared remote control function is optional, which use to delete user card alone.
5. Open door mode: card、exit switch.
6. Output: relay output; unlock time default 3S （or remote control settings 1-99 seconds,or reverse）
7. With Wiegand 26 input and output bi-directional interface,can be used as weigand reader;it can be connected to weigand 26 reader too.
8. Unattended automaticly add user card function（Automatic copy user card function）
9. Continue reading the wrong user card 10 times, Automatically lock the machine 90 seconds, and alarm
10. Operating Temp:－20℃——60℃; when standby, the lamp flash at the frequency of 1HZ.

1.2 Technical Parameters

Item	Technical Parameters	Item	Technical Parameters
Operating Voltage	DC9V-DC24V	Operating Temp	-20℃——60℃
Operating Current	≤ 100mA	Capacity	2000
Operating Humidity	20%——90%	Remote Control	Optional
Reading Distance	0-10CM	Electric Lock Output	Dry Contact(3A@24VDC)
Card Type	MF1or EM Card	Exit Switch Access	Automatic reset type

1.3 The Factory Default

Item	Default	Item	Default
Remote control programming password	123456	Lock、alarm time	90secs
Unlock Time	3secs	Automaticly add user card function	Closed

1.4 Wires Definitions

Mark	Color	Definition	Mark	Color	Definition
12V+	Red	Power +	NC.	White	NC output
GND	Black	Power -	SWITCH	Blue	Exit switch
NO.	Yellow	NO output	D0	Brown	WG DATA 0
COM.	Green	COM output	D1	Gray	WG DATA 1

Unlock is dry contact output,load capacity 3A@30VDC

1.5 Wiring Instruction

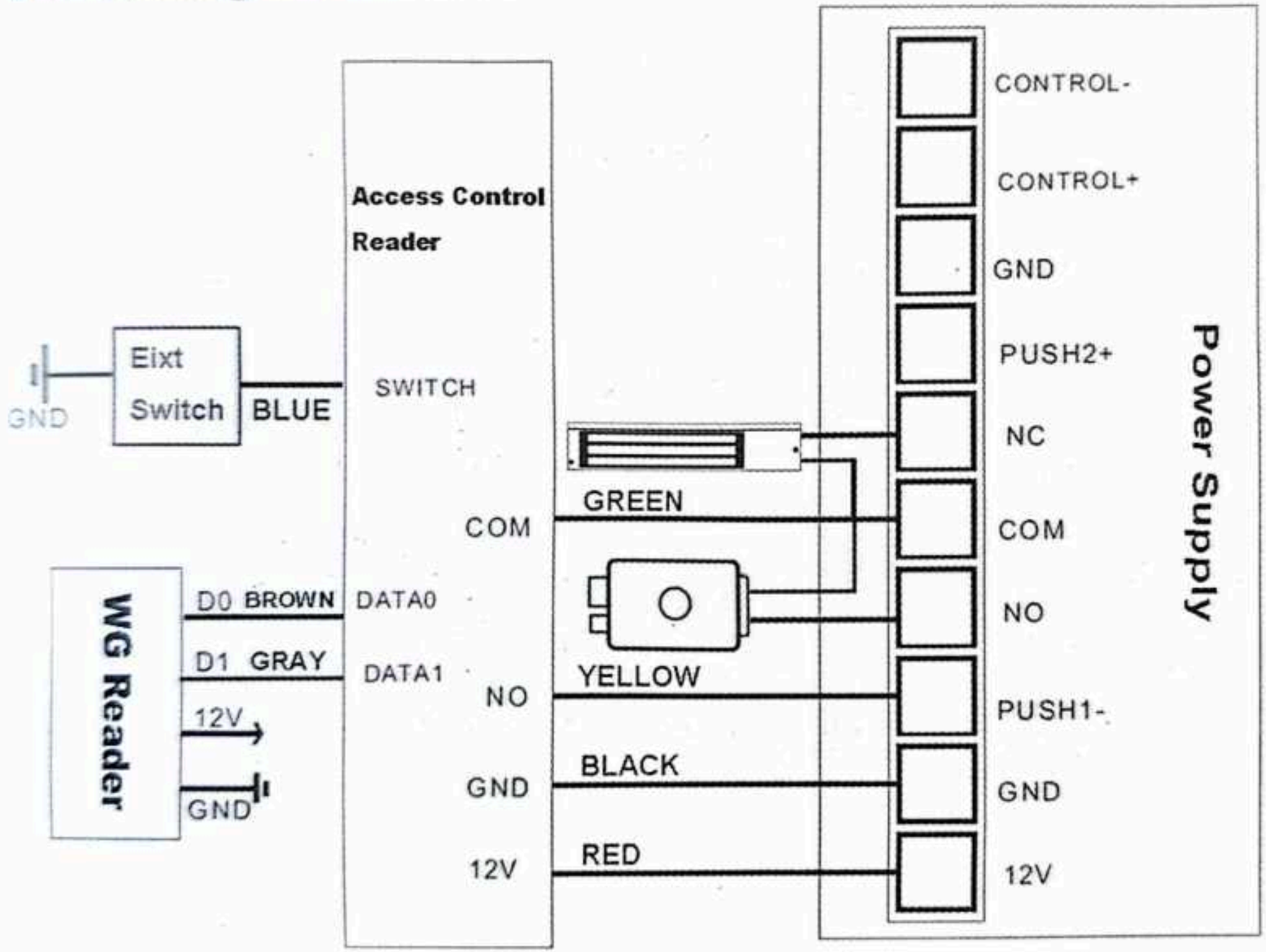

2、**Master Card Operation**（**If** no master card, please following step 2.4 to set, then start operating）

2.1、Issue user card

Read the master card（buzz once, flashing blue lights）——> continuelly reading user card which need to add——>read the master card to exit. Kindly suggest that make record of the user card number,which can facilitate future management.

2.2、Delete user card（If the user card is lost, please reference to the infrared remote control operation）

Read the master card 2 times in 3 secs（blue light flashes and then change to red light flashes）——> continuelly reading user card which need to delete——> read the master card to exit.

2.3、Delete all user cards（clear all user card data）

Keep reading the master card at least 5 secs,（hold time, red, blue light flashing at the same time），after a few seconds, the device "Di Di Di" prompt, all user cards data are cleared automatically.

2.4、Setting Master Card（Operates only when the master card is lost!）

Cut off the power——>connect the blue wire to power 12VDC "-", power on（light flashing, buzzing tips）——> disconnect the blue wire to power 12VDC "-",（light doesn't flash，the buzzer stops）——>read new user card，this user car will be the master card, the previous master card will be invalid; The remote control password is restored to 123456 at the same time. **Note: this operation will not cause the original user card is lost!**

The following steps need to use a dedicated remote control to operate

3、Advanced function settings

Programing Item		Operation
Common Operations	Modify Programming Password	* Programming Password # 0 New Programm Password # *
	Quickly issue user card	* Programming Password # 1 continuelly rea
	Quickly Delete user Card	* Programming Password # 2 continuelly rea
	Delete All User Cards	* Programming Password # 2 Programming
Extended Operation	Setting Master Card	* Programming Password # 8 Read card
	Issue User Card by Entering Card number	* Programming Password # 1 input 8-digits card number #
	Issue User Card by code of card	* Programming Password # 1 input 4-digits
	Issue User Card by adding consecutive card	* Programming Password # 1 input 4-digits first card number #
	Modify Relay Unlock Time	* Programming Password # 3 (1-99) #
	Set the Unlock Mode to Reverse	* Programming Password # 3 0#
	Delete User Card by code of card	* Programming Password # 2 the code of
	Delete User Card by Entering Card number	* Programming Password # 2 8-digits user number #
	Open Mode of Automaticly Issue user Card	* Programming Password # 91#
	Close Mode of Automaticly Issue user Card	* Programming Password # 92#

	Remark
ing Password # New Programming	Press key * to exit, same for following steps operate.
ing user card which need to add #	
ing user card which need to delete #	
assword #	Eg: * 123456#2 123456#
	Do this operation When master card is lost, the system automatically exits.
er card number or 10-digits user	
de of card # read card #	The code of card is from 0001-2000
de of card # number of cards # the	The card number must be consecutive, consecutive cards code will start from the first card code, card code and card number increase 1 automatic input to the system in turn, if card data or serial number is occupied(used), then automatically exit! Please be cautious to operation.
	The numbers are 1-99, time delay1-99 secs
	Result : read card to open the door, read card again to close
r #*	
ar *number or 10-digits user card*	
	As long as read user card, enter automatically and open the door
	The default state